CUTTING TOOLS

FACING CUTTER

Facing Tools are commonly used on the tube ends of heat exchangers, condensers, boilers, and similar equipment.
They are easy to use and significantly improve work efficiency.

These tools can be connected to a clockwise-rotating electric drill or a hydraulic power system for operation.

Standard application range: O.D. 12.7 mm to O.D. 50.8 mm

▼ FK TYPE

FK TYPE BIT

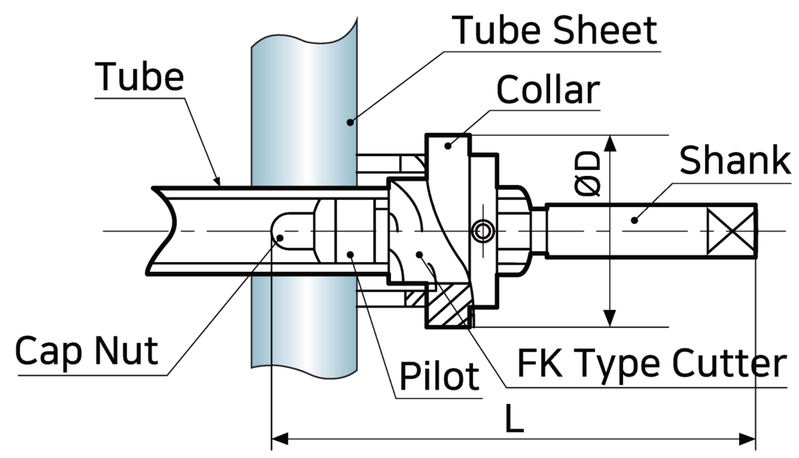

Tool No.	Tube Size O.D.	Tube Size Thickness	Tube Size BWG	D	L	Shank
FK-4	12.70 (1/2)	2.11 1.65 1.47 1.24	14 16 17 18	41	116	Ø9.5
FK-5	15.88 (5/8)	1.83 1.65 1.47 1.24	15 16 17 18	44	118	Ø12.7
FK-6	19.05 (3/4)	2.41 2.11 1.83 1.65 1.47 1.24	13 14 15 16 17 18	47	118	Ø12.7
FK-8	25.40 (1)	3.76 3.40 3.05 2.77 2.41 2.11 1.83 1.65 1.47 1.24	9 10 11 12 13 14 15 16 17 18	60	135	Ø12.7

Tool No.	Tube Size O.D.	Tube Size Thickness	Tube Size BWG	D	L	Shank
FK-10	31.75 (1-1/4)	3.40 3.05 2.77 2.41 2.11	10 11 12 13 14	65	178	Ø12.7
FK-12	38.10 (1-1/2)	3.40 3.05 2.77	10 11 12	74	185	Ø12.7
FK-14	44.50 (1-3/4)	3.40 3.05 2.77 2.11	10 11 12 14	84	205	Ø15.7
FK-16	50.80 (2)	4.19 3.76 3.40 2.41	8 9 10 13	94	205	Ø15.7

CUTTING TOOLS

INTERNAL TUBE CUTTER

▼ PR TYPE

- The internal tube cutters are ideal for cutting thick-walled boiler tubes with an O.D. of 2″ (50.8 mm) and above. They are driven clockwise by a square drive machine and can be powered by electric, pneumatic, or hydraulic systems.
- The tube cutters are available with a standard reach of 4″ (101.6 mm). Additional reach extensions are offered in 4″ (101.6 mm) increments, up to 16″ (406.4 mm).

Tube I.D.		Max. Tube O.D.		Body Diameter		Model No.	Spare Bit	Drive Square Male	
mm	inch	mm	inch	mm	inch			mm	inch
10-12	0.394-0.472	15	0.591	9.5	0.374	0951	0952	12.70	1/2″
11-13	0.433-0.512	18	0.709	10.5	0.413	1051			
12-14	0.472-0.551	19	0.748	11.5	0.453	1151	1152		
13-15	0.519-0.591	20	0.787	12.5	0.492	1251	1252		
14-17	0.551-0.669	23	0.906	13.5	0.531	1351			
16-19	0.630-0.748	25	0.984	15.5	0.610	1551			
18-21	0.709-0.827	27	1.063	17.5	0.689	1751	1752		
20-25	0.787-0.984	34	1.339	19.5	0.768	1951	1952		
25-30	0.984-1.181	38	1.496	24.5	0.965	2451	2452		
30-35	1.181-1.378	43	1.693	29	1.142	2901	2902		
35-40	1.378-1.575	48	1.890	33	1.299	3301			
40-50	1.575-1.969	58	2.126	38	1.496	3801			
50-60	1.969-2.362	68	2.677	48	1.890	4801	4802	19.05	3/4″
55-65	2.165-2.559	73	2.874	53	1.496	5301			
65-75	2.559-2.953	83	3.268	63	2.087	6301			
75-85	2.953-3.346	93	3.661	73	2.480	7301	7302		
85-95	3.346-3.740	103	4.055	83	3.268	8301			
95-105	3.740-4.134	113	4.449	93	3.661	9301			

CUTTING TOOLS

INTERNAL TUBE CUTTER

Designed for fast and precise internal tube cutting during tube removal from tube sheets in condensers and heat exchangers.

▼ PUSH TYPE

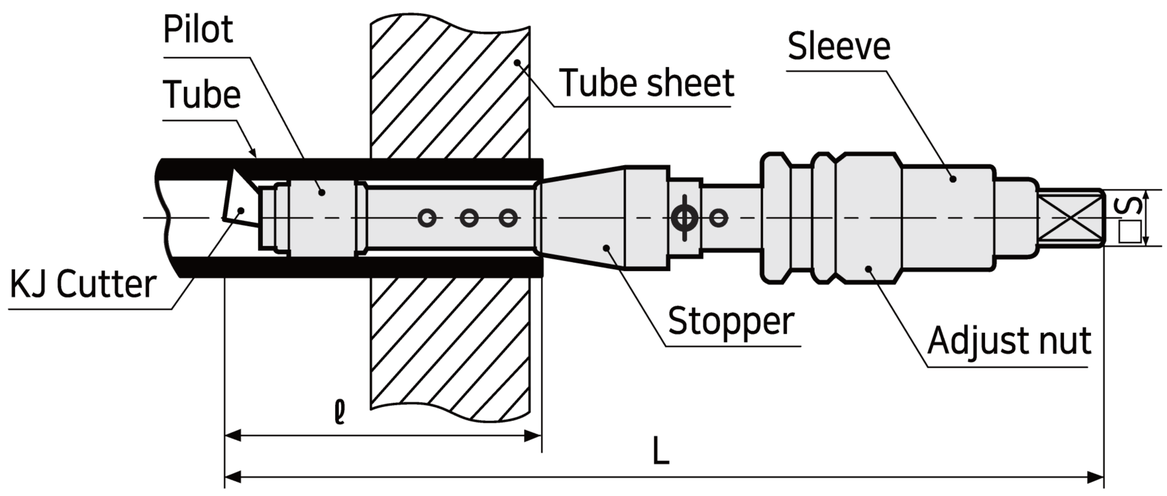

Tool No.	Cutting Range		Max. Cutting Depth ℓ mm (in.)	Cutter No.	Shank Size S mm(in.)	Overall Length L mm(in.)
	Min. mm(in.)	Max.mm(in.)				
TKJ 10 TKJ 11 TKJ 12 TKJ 13	10 (0.39) 11 (0.43) 12 (0.47) 13 (0.51)	17 (0.67)	80 (3.15)	KJ 17	9.5 (3/8)	211 (8.30)
		20 (0.79)		KJ 20		
TKJ 14 TKJ 15 TKJ 16 TKJ 17 TKJ 18 TKJ 19	14 (0.55) 15 (0.59) 16 (0.63) 17 (0.66) 18 (0.70) 19 (0.74)	24 (0.94)	80 (3.15)	KJ 24	9.5 (3/8)	216 (8.50)
		27 (1.06)		KJ 27		
		30 (1.18)		KJ 30		
TKJ 20 TKJ 21 TKJ 22 TKJ 23 TKJ 24 TKJ 25	20 (0.78) 21 (0.82) 22 (0.86) 23 (0.90) 24 (0.94) 25 (0.98)	33 (1.30)	80 (3.15)	KJ 33	12.7 (1/2)	226 (8.90)
		38 (1.50)		KJ 38		
TKJ 26 TKJ 27 TKJ 28	26 (1.02) 27 (1.06) 28 (1.10)	42 (1.65)	100 (3.94)	KJ 42	12.7 (1/2)	261 (10.28)
TKJ 29 TKJ 30 TKJ 31 TKJ 32	29 (1.14) 30 (1.18) 31 (1.22) 32 (1.26)	46 (1.81)	100 (3.94)	KJ 46	15.8 (5/9)	261 (10.28)

Note : The following information is required when placing an order: Tube O.D., wall thickness, material, and cutting depth.